Design Project Guideline

2015.12.8

High-Speed Circuits & Systems Lab.
Dept. of Electrical and Electronic Engineering
Yonsei University

Goal

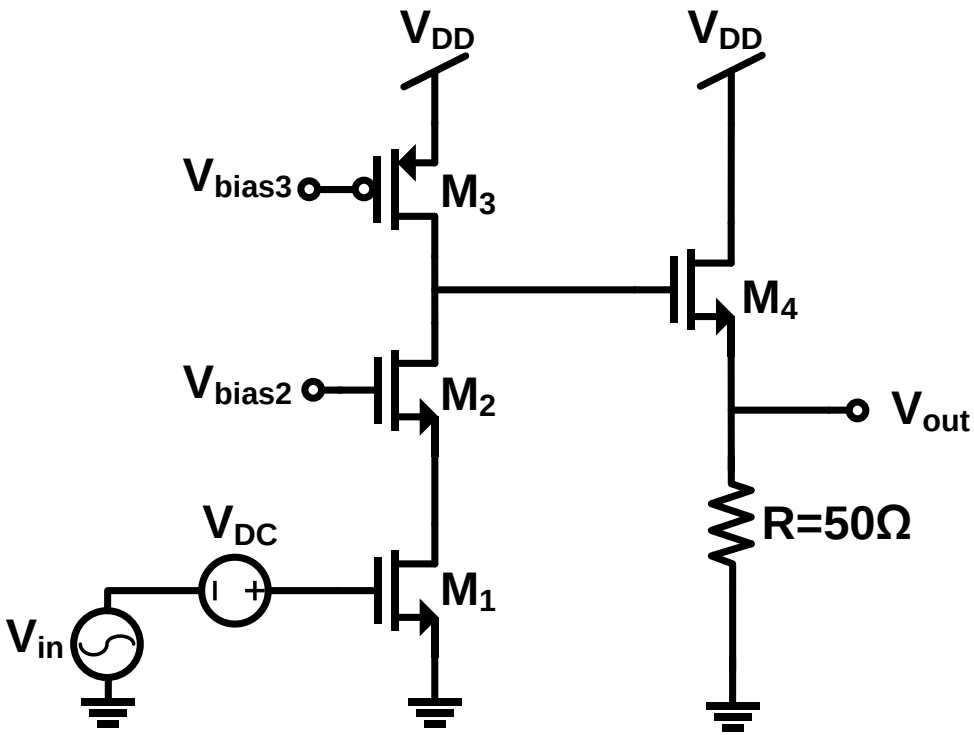

- ✓ nMOS & pMOS small-signal parameter extraction
  ➔g_m, r_o calculation
- ✓ Amplifier design
  ➔Satisfy gain, output swing, power consumption

Pspice Simulation

In class homepage,

Lecture Notes

-Simulation-

PSpice 9.1 Student Version

Download! PSpice Basic Manual

MOSFET Library

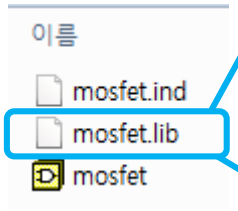

<MOSFET library>

```
.MODEL orbit2L2N NMOS (                                   LEVEL   = 7
+TNOM    = 27              TOX     = 5.6E-9
+XJ      = 1E-7            NCH     = 2.3549E17       VTH0    = 0.3654765
+K1      = 0.4732214       K2      = 7.994532E-4     K3      = 1E-3
+K3B     = 3.0713494       W0      = 1E-7            NLX     = 1.617898E-7
+DVT0W   = 0               DVT1W   = 0               DVT2W   = 0
+DVT0    = 0.455178        DVT1    = 0.6258687       DVT2    = -0.5
+U0      = 280.4589023     UA      = -1.607126E-9    UB      = 2.806549E-18
+UC      = 3.290051E-11    VSAT    = 1.07496E5       A0      = 1.8770435
+AGS     = 0.3310181       B0      = -3.173524E-8    B1      = -1E-7
+KETA    = -8.69841E-3     A1      = 8.317145E-5     A2      = 0.6592347
+RDSW    = 200             PRWG    = 0.4477477       PRWB    = 0.0208175
+WR      = 1               WINT    = 0               LINT    = 1.392558E-10
+DWG     = -2.28419E-8
+DWB     = -6.95781E-10    VOFF    = -0.0910963      NFACTOR = 1.202941
+CIT     = 0               CDSC    = 2.4E-4          CDSCD   = 0
+CDSCB   = 0               ETA0    = 5.0732E-3       ETAB    = 6.262008E-5
+DSUB    = 0.0310034       PCLM    = 1.5101091       PDIBLC1 = 0.897659
+PDIBLC2 = 2.924029E-3     PDIBLCB = 0.0651312       DROUT   = 1
+PSCBE1  = 7.017738E8      PSCBE2  = 2.271109E-4     PVAG    = 8.531511E-3
+DELTA   = 0.01            RSH     = 4.6             MOBMOD  = 1
+PRT     = 0               UTE     = -1.5            KT1     = -0.11
+KT1L    = 0               KT2     = 0.022           UA1     = 4.31E-9
+UB1     = -7.61E-18       UC1     = -5.6E-11        AT      = 3.3E4
+WL      = 0               WLN     = 1               WW      = 0
+WWN     = 1               WWL     = 0               LL      = 0
+LLN     = 1               LW      = 0               LWN     = 1
+LWL     = 0               CAPMOD  = 2               XPART   = 0.5
+CGDO    = 4.59E-10        CGSO    = 4.59E-10        CGBO    = 5E-10
+CJ      = 1.78338E-3      PB      = 0.99            MJ      = 0.4661295
+CJSW    = 4.154041E-10    PBSW    = 0.9563049       MJSW    = 0.3162462
+CF      = 0               PVTH0   = -9.648921E-3    PRDSW   = -10
+PK2     = 3.534961E-3     WKETA   = 0.0120981       LKETA   = -3.31688E-3     )
```

Small-Signal Parameter Extraction

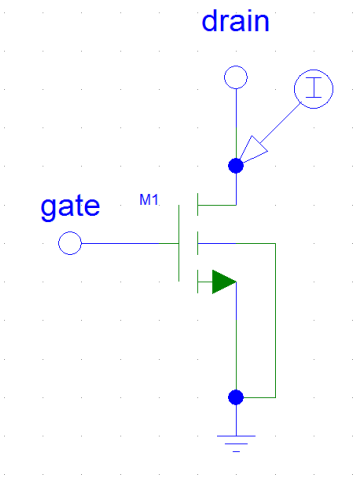

<nMOS schematic>

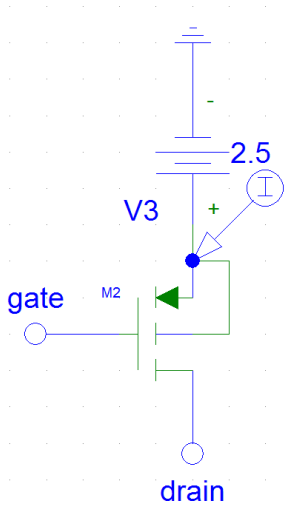

<pMOS schematic>

- ✓ V_{DS}=2V
- ✓ Plot I_D vs V_{GS}
  - ➔ g_m calculation($\frac{\partial I_D}{\partial V_{GS}}$)
  - ➔ Maximum g_m>3mS

- ✓ V_G=1.25V
- ✓ Plot I_D vs V_{DS}
  - ➔ r_o calculation($\frac{\partial I_D}{\partial V_{DS}}$)
  - ➔ r_o>185kΩ

I_D vs V_{GS}

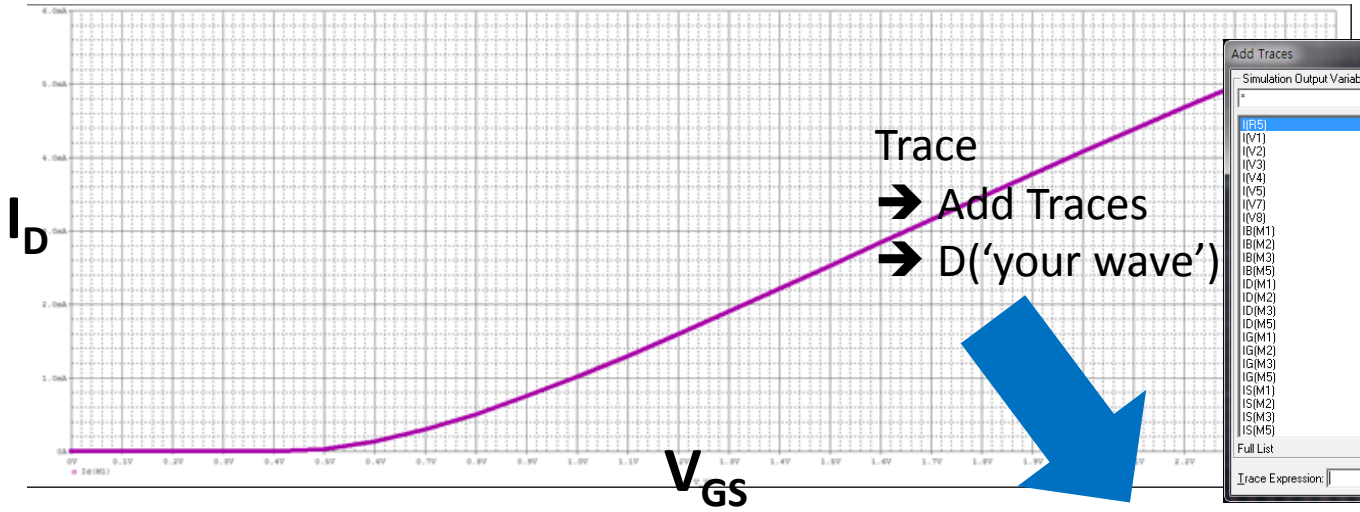

Trace
➔ Add Traces
➔ D('your wave')

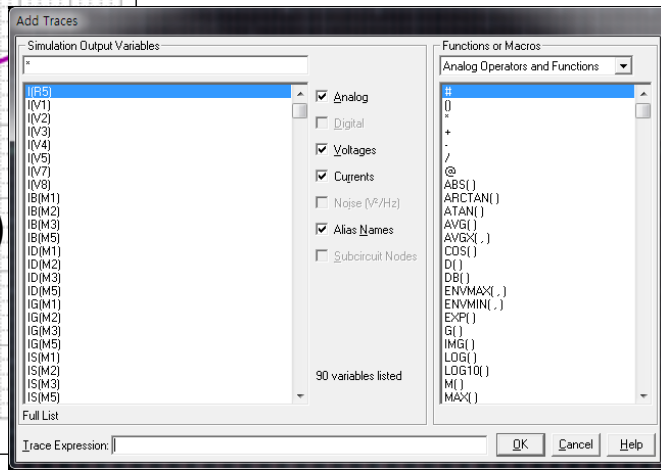

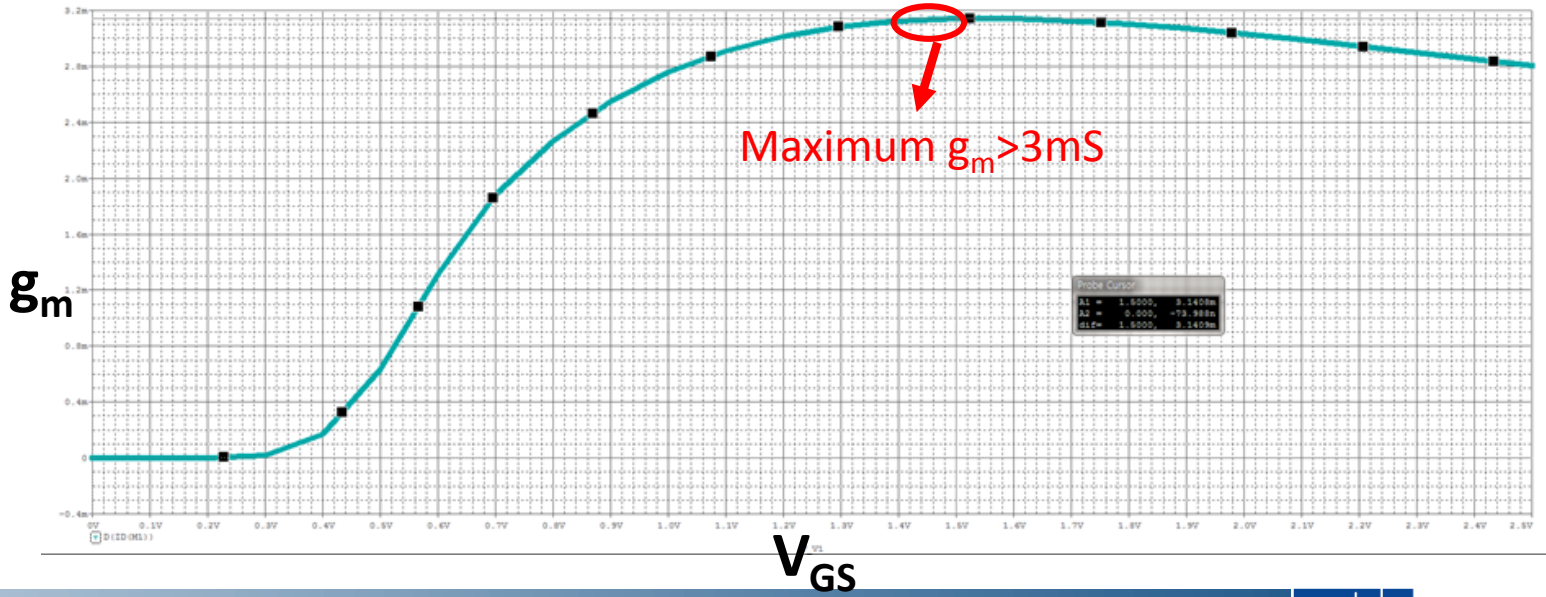

I_D vs V_{SD}

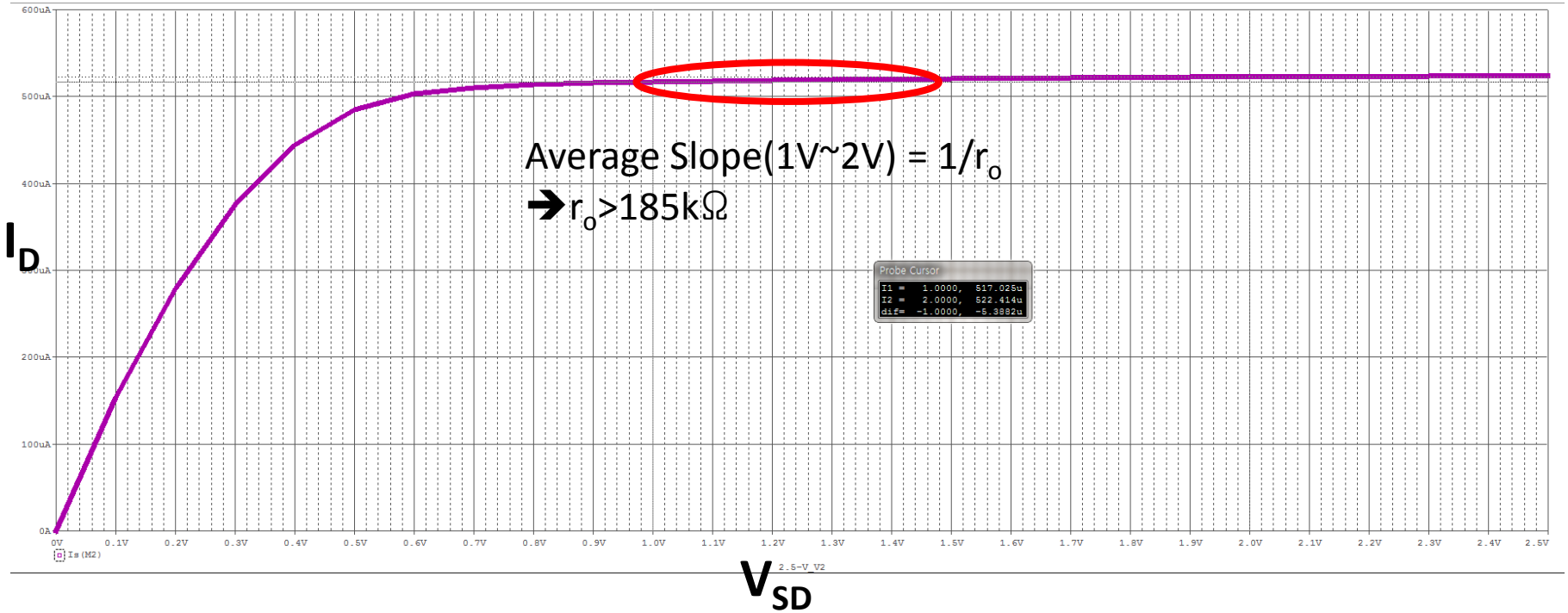

Cursor Usage

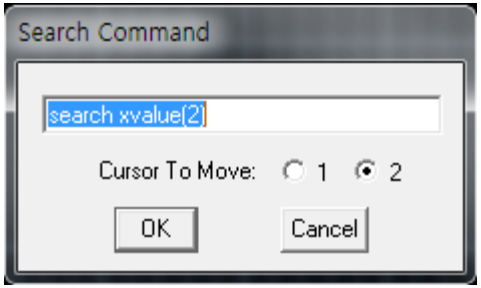

Amplifier

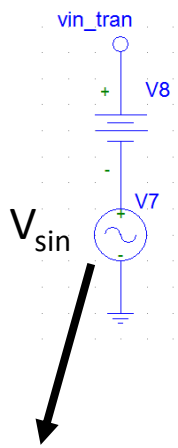

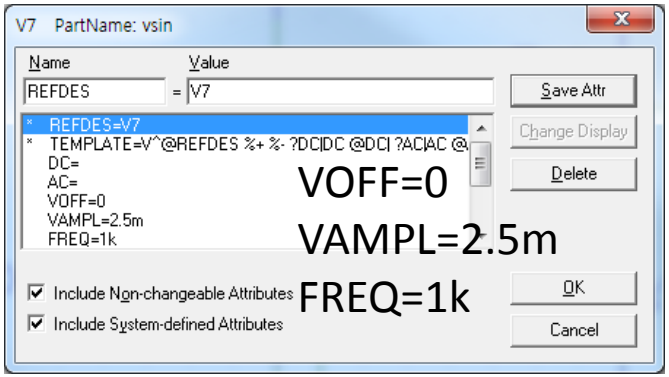

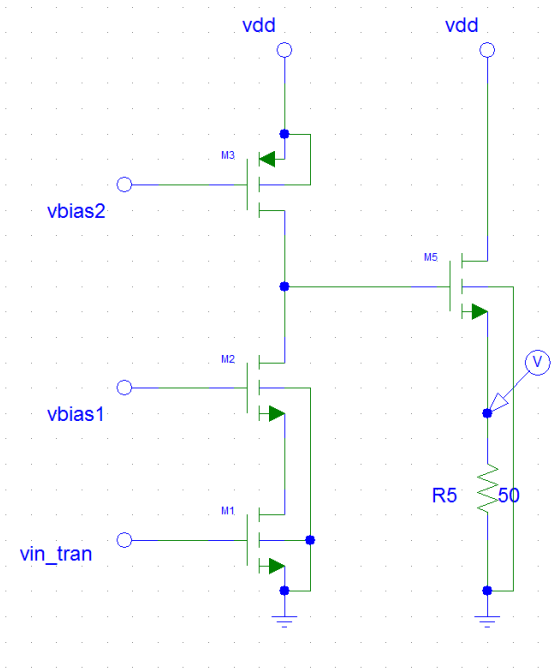

- ✓ Output swing > 0.9 V_{pp}
- ✓ Gain($|A_v| = \left|\frac{v_{out}}{v_{in}}\right|$) > 40dB
  dB = 20*log($|A_v|$)
- ✓ Power consumption < 35mW
  VDD * (current summation)

Output Swing

✓ DC sweep(V_{in} vs V_{out})

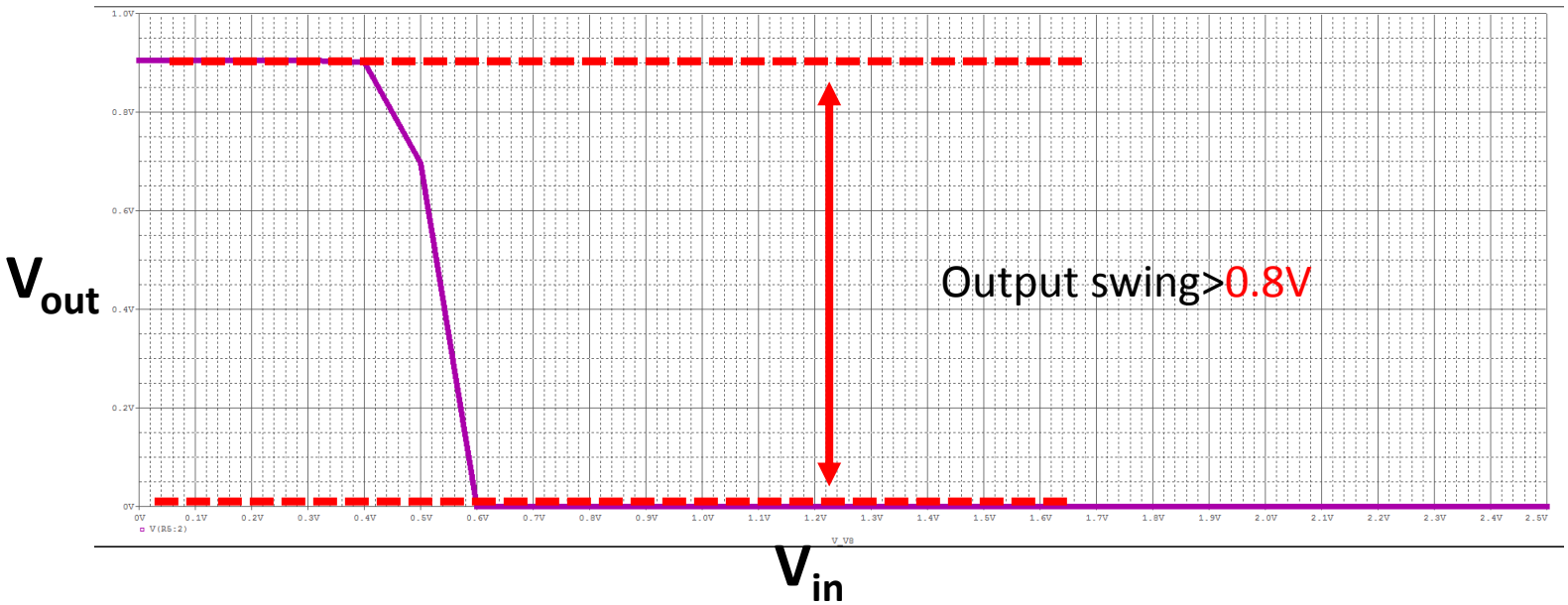

Transient Simulation

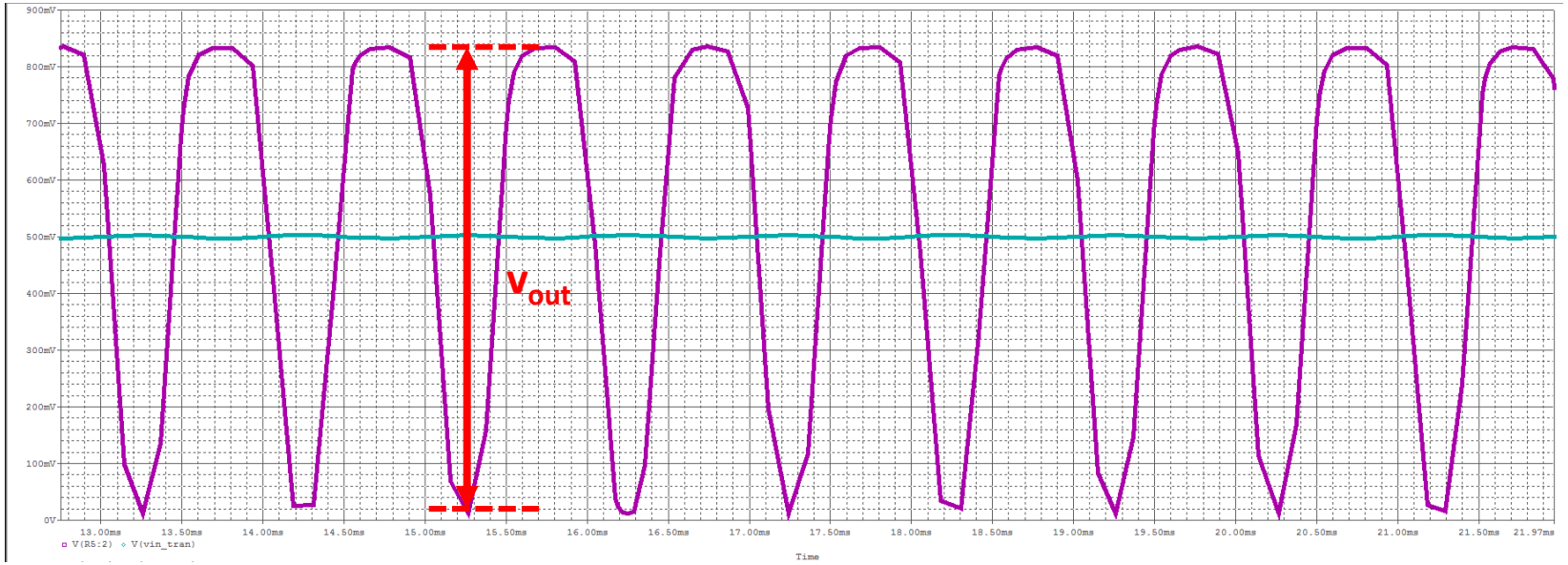

- ✓ V_{in}=5mV
  ➔v_{out}/v_{in} > 40dB

Grading Policy

- Small-signal analysis[20], Single-ended amplifier[50], Report[30]

- For gain of amplifier, design with larger gain will get more points. Grade policy is followed in table.

Grade A (6 person)	10 points
Grade B (6 person)	8 points
Grade C (6 person)	6 points
Grade D (6 person)	4 points
Grade E (6 person)	2 points

- Deadline : 10:00 AM , 23 Dec. 2015 @ B629(Hardcopy)